MODEL 2722

Current Unbalance Detector

- Monitors 3-phase AC Current
- Compares Three Single-phase Motors
- Detects Open 3-phase Heating Element
- UL Recognized; CSA Certified
- Automatic or Manual Reset

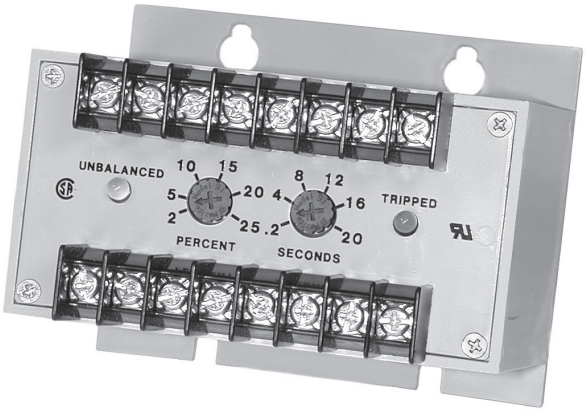

DESCRIPTION

The Model 2722 Current Unbalance Detector is designed to monitor 3-phase AC current (or compare three single-phase AC currents). A solid-state electronic sensing circuit drives an internal DPDT relay which energizes during normal, balanced conditions. An unbalanced condition will cause the relay to drop out. The formula for an unbalance is:

$$\left(\frac{\text{MAX CURRENT - MIN CURRENT}}{\text{MAX CURRENT}}\right) 100 = \%$$

The Model 2722 accepts current inputs up to 5 amps and will consider zero amps as balanced (relay stays energized), making the device suitable for use with 3-phase heaters.

The Model 2722 has adjustments for percent of unbalance and time delay before tripping. It will automatically reset upon restoration of correct current balance, or a normally-closed momentary switch can be connected for a manual reset. External CT's can be used to extend the operating current range.

SPECIFICATIONS

Model	A2722	B2722	C2722
Input Voltage	24VAC	120VAC	240VAC
Input Voltage Range	20-28VAC	100-130VAC	190-250VAC
Power Consumption	1.5W max.		
VA Burden	0.5VA per phase		
Frequency Range	50 - 400Hz		
Current Range	1 - 5 amps AC		
Transient Protection	2500V for 10ms		
Unbalance Adjustment	2% to 25%		
Trip Delay	0.2 to 20 seconds ± 5%		
Output Contacts	DPDT 10A at 240VAC resistive		
Expected Relay Life	Mech: 10 million operations Elec: 100,000 at rated load		
Operating Temperature	- 20º to +131º F		
Humidity Tolerance	0-97% w/o condensation		
Enclosure Material	ABS plastic		
Weight	1.35 lbs		
Agency Approvals	UL Recognized CSA Certified		

DIMENSIONS

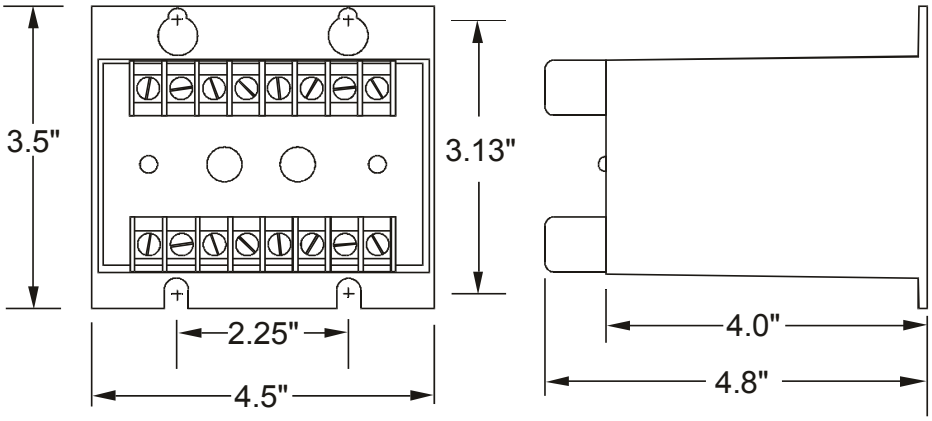

Telephone: Main - (918) 438-1220
Sales - (800) 862-2875
Fax: (918) 437-7584

E-mail: sales@time-mark.com
Internet: http://www.time-mark.com

TIME MARK CORPORATION

11440 East Pine Street
Tulsa, Oklahoma 74116

11/2011

© 2011 TIME MARK CORPORATION

TIME MARK is a division of AEMT, Inc.

MODEL 2722 Current Unbalance Detector

READ ALL INSTRUCTIONS BEFORE INSTALLING, OPERATING OR SERVICING THIS DEVICE.
KEEP THIS DATA SHEET FOR FUTURE REFERENCE.

GENERAL SAFETY

POTENTIALLY HAZARDOUS VOLTAGES ARE PRESENT AT THE TERMINALS OF THE MODEL 2722.
ALL ELECTRICAL POWER SHOULD BE REMOVED WHEN CONNECTING OR DISCONNECTING WIRING.
THIS DEVICE SHOULD BE INSTALLED AND SERVICED BY QUALIFIED PERSONNEL.

Installation Instructions

INSTALLATION

Mount the Model 2722 in a safe location, observing all precautions as outlined in the General Safety section above.

Connect the 3-phase wires to the terminals marked **A**, **B**, and **C.** Apply power to the AC connections.

Connect the control wiring to the opposite side of the unit, to the terminals with the relay markings. These markings show the relays in the de-energized condition (Refer to Typical Application diagrams).

Unbalance occurs when the amount of current unbalance is greater than the unbalance control setting (UNBALANCE L E D-On). The unbalance condition starts the trip delay which, after time-out, causes a tripped condition (TRIP L E D-On; relay de-energized).

The unit automatically resets when the current unbalance is less than the unbalance setting.

An optional manual reset is also available as shown in the Typical Application diagram. Set the UNBALANCE and TRIPPED delays as required.

TYPICAL APPLICATION: 3-Phase Motor

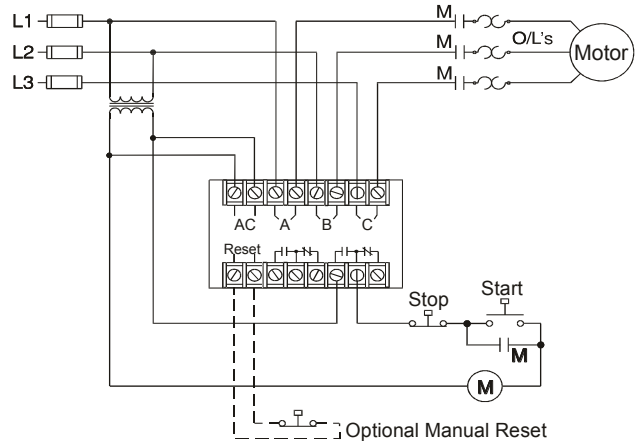

Shows No Power Applied

TYPICAL APPLICATION: 3-Phase Heater

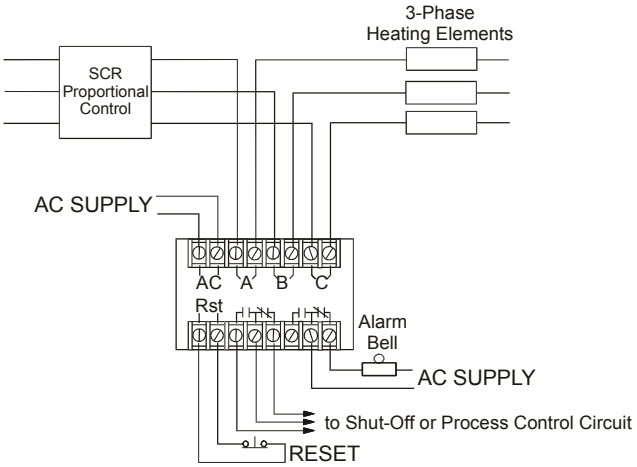

Shows No Power Applied

TROUBLESHOOTING

Should the Model 2722 fail to operate properly, check that three currents are present, and are of the correct level. Check all fuses and verify that all wiring connections are correct. Should problems persist, contact the factory at (800) 862-2875 for assistance.

WARRANTY

This product is warranted to be free from defects in materials and workmanship for one year. Should this device fail to operate, we will repair it for one year from the date of manufacture. For complete warranty details, see the *Terms and Conditions of Sales* page in the front section of the Time Mark catalog or contact Time Mark at 1-800-862-2875.

Telephone: Main - (918) 438-1220
Sales - (800) 862-2875
Fax: (918) 437-7584

E-mail: sales@time-mark.com
Internet: http://www.time-mark.com

TIME MARK CORPORATION

11440 East Pine Street
Tulsa, Oklahoma 74116

11/2011

© 2011 TIME MARK CORPORATION

TIME MARK is a division of AEMT, Inc.