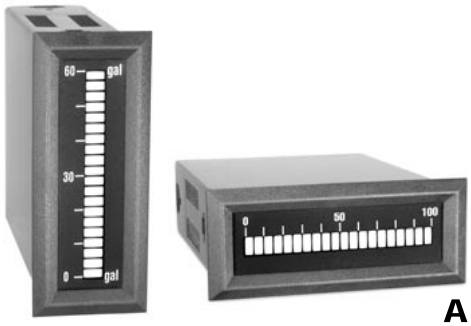

AM-Series

FUNCTION SPECIFIC METERS

AM-20

Solid State Analog Meter Twenty 0.15″ LED Segments in a Slim Bezel Case

A rugged, high accuracy LED bargraph panel meter with 20MΩ input impedance, multiple display modes, dual scaling and powered from 4V to 6VDC Bargraph mode 4V to 24VDC in Dot mode.

The AM-20 is a highly versatile, solid-state analog meter capable of a variety of user programmable display modes. It is designed to meet the requirement in many applications for a rugged, high input impedance meter that has instantaneous response and is immune to the vibration, sticking and overshoot problems associated with needle-type meters.

The meter's display consists of 20 LED segments individually driven by 20 comparators divided into a left side set and a right side set of ten comparators each.

The user can select and adjust the three internal reference voltages that are applied respectively, to the left side of the left comparator set, the center point where the two comparator sets are joined in series and the right side of the right comparator set. The meter's circuitry detects when the input signal corresponds to the voltage at any one of the 20 points along the two comparator divider networks with a step accuracy of better than 0.1%. The meter can be adjusted so that both comparator sets have an equal reference voltage across them which will produce a linear full scale display, or if required, they can have a different reference voltage which will enable each half of the meter's display to have a different scale or sensitivity.

Bar or Dot Mode Voltmeter

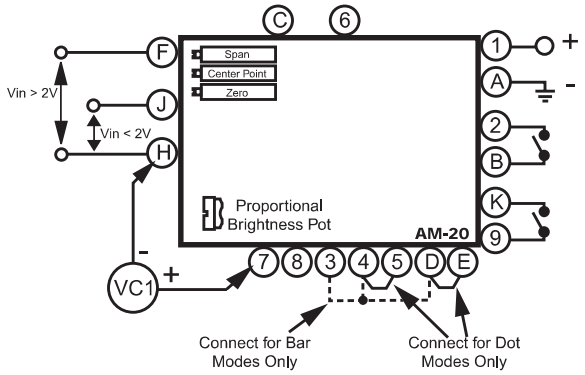

The AM-20 is shipped in a standard Slim Bezel case. The Slim Bezel case is compatible with the CM, SM, PM, & SP Series of meters. The AM-20 can be ordered in End Mount cases for twin mounting or combinations of multiple center mount cases and two end mount cases for stack mounting.

SLIM



BEZEL

Input Configuration: .....Single-ended

Input Impedance: .....Exceeds 20MΩ on 2V range; 10MΩ on all other ranges.

Full Scale Ranges: .....2VDC (Standard)
20VDC
200VDC
1200VDC (Maximum Input Signal)
All ranges except 1200VDC are field adjustable from 20% to 120% of the basic full scale range value.

A/D Converter: .....Flash Converter

Accuracy: .....±0.5% of Full Scale

Temperature Coefficient:...150PPM/˚C on 2V range; 200PPM/˚C on all other ranges

Warm Up Time: .....Instantly to specified accuracy

Conversion Rate: .....Instantaneous Flash Converter

Display:.....0.15" Segment height; 20 LED's

Over-range Indication: ....All bars flash

Power Supply:.....5V DC @ 280mA

Operating Temperature: ...–10˚C to +60˚C

Storage Temperature:.....-20˚C to +70˚C

Relative Humidity: .....95% non condensing

Case Dimensions: .....Bezel 2.76” x 1.17” (69.75 x 29.7mm)
Depth behind Bezel 3.32”(84mm) plus 0.68” (17.27mm) for connector.

Weight:.....90.72 gms (3.2 oz)
136.1 gms (4.8 oz) when packed

AM-30 . . . . . .Red 30 Seg. Bargraph, 0.05/0.1/0.2/**1**/5/10VDC/4-20mA
AM-30R1 . . . . . .Red 30 Seg. Bargraph, 1 VDC std w/one 2 A/120 VAC relay
AM-30R2 . . . . . .Red 30 Seg. Bargraph, 1 VDC std w/two 2 A/120 VAC relays

The diagram below depicts the Model AM-20 in its standard 2V F.S. form with all component values indicated for this mode of operation. Variations from the standard for use in special applications will be found under the heading Typical Application Circuits & Connection Instructions.

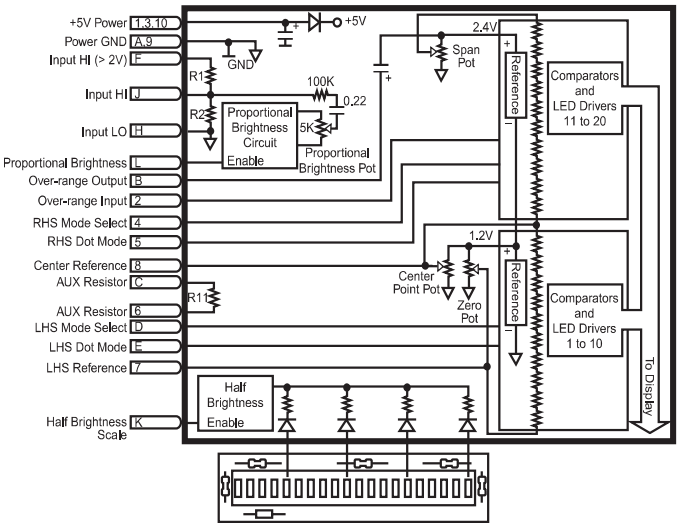

The Texmate Model AM-20 interconnects by means of a standard PC board edge connector having two rows of 10 pins, spaced on 0.156" centers. Connectors are available from Texmate, or from almost any connector manufacturer.

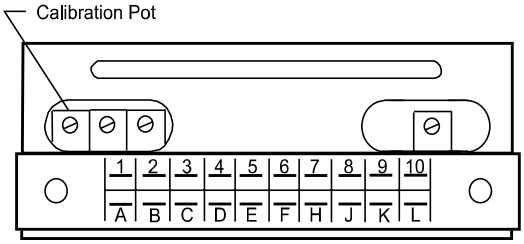

REAR VIEW OF METER CASE

Component Side		Solder Side
POSITIVE POWER INPUT	1	A POWER GROUND INPUT
OVERRANGE INDICATION INPUT	2	B OVERRANGE INDICATION OUTPUT
AUXILLIARY POSITIVE POWER OUTPUT	3	C RESISTOR R11
RIGHT BARGRAPH DISPLAY SELECT	4	D LEFT BARGRAPH DISPLAY SELECT
RIGHT DOT DISPLAY SELECT	5	E LEFT DOT DISPLAY SELECT
RESISTOR R11	6	F VOLTAGE DIVIDER SIG HI INPUT
LEFT COMPARATOR REFERENCE	7	H SIGNAL LOW INPUT/ANALOG COMMON
CENTER COMPARATOR REFERENCE/ ISOLATED BIPOLAR SIGNAL LOW INPUT	8	J SIGNAL HIGH INPUT
AUXILIARY POWER GROUND	9	K HALF BRIGHTNESS SCALE ENABLE
AUXILIARY POSITIVE POWER OUTPUT	10	L PROPORTIONAL BRIGHTNESS DOT ENABLE

CAUTION: This meter employs high impedance CMOS inputs. Although internal protection has been provided for several hundred volt overloads, the meter will be destroyed if subjected to the high kilovolts of static discharge that can be produced in low humidity environments. Always handle the meter with ground protection.

Pin A-Power Ground Input: Negative terminal of power supply should be connected to Pin A.

Pin B- Overrange Indication Output: Pin B should be connected to Overrange Indication Input Pin 2 to enable the overrange feature (see Pin 2).

Pin C and 6 - Resistor R11: Pins C and 6 are wired to R11, an auxiliary resistor provided for use in any applications requiring a 1KΩ resistor.

Pin D- Left Side Bargraph Display Select: Pin D should be connected to Auxiliary Positive Power Output Pin 3 to enable the left side of the display to operate in a bargraph mode. Do not connect Pin D to Pin 3 when using Dot Display mode.

Pin F-Voltage Divider Signal High Input: Signal high input for voltages that require attenuation or scaling. Dividing resistors R1 and R2 may be mounted internally for voltages up to 1200V max. Matched dividing resistors for 20V (1/10), 200V (1/100), and 1200V (1/100) ranges are available from Texmate.

Pin H-Signal Low Input/Analog Common: Pin H should be used for signal return. NOTE: Pin H is connected internally to Power Ground Input Pin A and Auxiliary Power Ground Pin 9 is therefore not isolated from power ground.

Pin J- Signal High Input: Signal high input to both comparators. The maximum overvoltage protection is 200VDC or 150VAC. The displayed reading is proportional to the internally generated reference voltage applied across each comparator IC. The smallest usable reference voltage on either comparator is 200mV which provides a minimum full scale span of 400mV. The highest reference voltage possible is 1.2V which provides a maximum full scale span of 2.4V. For higher input voltages if is necessary to attenuate the input signal (see Pin F). The reference voltages applied to the comparators are controlled by three potentiometers. R5 supplies the reference input to the left-most side of the first comparator LSI-1. R4 supplies the reference input to the center point where both comparators are connected in series and R3 supplies the right-most side of the second comparator LSI-2. In normal 2V full scale left to right movement R5 would be adjusted to 0V, R4 would be adjusted to 1V and R3 would be adjusted to 2V. Either comparator can be scaled differently as required. R4 can be adjusted completely to 0V, in which case the center of the display would become the zero point. Appropriate selection of the various display modes and the reference voltage levels adjusted by each of the three potentiometers enables a wide range of display formats to be utilized. If the input signal is isolated from the meter's power supply, bipolar signals can also be measured by applying the isolated Signal Low to Pin 8. To simplify calibration the reference voltages from R5 and R4 can be monitored. (See Pins 7 & 8.)

Pin K-Half Brightness Scale Enable: Connect Pin K to Auxiliary Power Ground Pin 9 to half-light the 5th, 10th, 15th and 20th display segments as a scale indication. NOTE; When the 20th segment is half-lighted the overrange indication will not operate. To enable both the flashing overrange feature and the scale display option it is necessary to disable the half brightness scale display power to the last segment by removing CR2. (See Component layout.)

Pin L-Proportional Brightness Dot Enable: When the meter is operated in the Dot Display mode Pin L can be connected to Auxiliary Positive Power Pin 10 activating a sawtooth wave form generator, the signal from which is superimposed over the analog input signal. The effect of this is to convert the display from a single segment dot to a multi-segment proportional brightness dot. The Peak-to-peak voltage of the sawtooth wave is adjusted by R12. Although for some applications, a dot of up to ten segments wide may be created, the optimum adjustment of R12 provides a proportional brightness dot that is 3 to 5 segments wide. The center segments will be brightest indicating the actual analog signal point with the segments to each side of the center point growing proportionally dimmer. This feature more than doubles the effective resolution of the meter as optically it is readily apparent where the signal is in relation to any two adjacent segments.

Pin 1 - System Power Input: Positive terminal of power supply should be connected to Pin 1. The meter will operate with +4 to +6VDC (180mA max.) in the bar mode, or +4 to +24VDC in the dot mode. CAUTION: The voltage limitation in the bar mode is due to the maximum heat dissipation of the display driver IC's. Operation of the bar mode at higher voltages or at high ambient temperatures will cause IC failure.

Pin 2 - Overrange Indication Input: When Pin 2 is connected to overrange indication output Pin B and the analog input signal is of sufficient amplitude to light the 20th segment, the right side display will flash if the meter is in the Bargraph Display mode or the 10th and 20th segment will flash alternately in the Dot Display mode. If required, an external overrange signal can be easily derived as Pin 2 is normally at the same voltage potential as Positive Power Input Pin 1 except when the 20th segment is on, which causes Pin 2 to drop approximately 2V.

Pin 3 - Auxiliary Positive Power Output: This positive power output is connected directly to System Power Input Pin 1 and is provided to facilitate, when required, the connection of Pin D and Pin 4 to positive power.

Pin 4 - Right Side Bargraph Display Select: Pin 4 should be connected to Auxiliary Positive Power Output Pin 3 to enable the right side of the display to operate in a bargraph mode. Do not connect Pin 4 to Pin 3 when using dot display mode.

Pin 5- Right Side Dot Display Select: Pin 5 should be connected to Pin 4 to enable the right side of the display to operate in a Dot Display mode.

Pin 6 - Resistor R11: 1KΩ Resistor (See Pin C.)

Pin 7 - Left Side Comparator Reference Voltage Monitor: Pin 7 is connected to the reference voltage adjusted by potentiometer R5 that is applied to the left most side of the first comparator IC LSI-1. This voltage adjustable from 0 to 1.2V can be monitored from Pin 7 referred to Power Ground. When the reference voltage on Pin 7 is less than the reference voltage on Pin 8 the display segments will light up (or in the dot mode the dot will move) sequentially from left to right (1st to 10th). The number of segments lit (or the position of the dot) = (the input signal) divided by (the difference between the reference voltage on Pin 7 and the reference voltage on Pin 8) x 10. If the reference voltage on Pin 7 is greater than the reference voltage on Pin 8 then the segments will light sequentially from right to the left (10th to 1st) and the same formula for scale applies

Pin 8 - Center Point Comparator Reference Monitor - Isolated Bipolar Signal Low Input: Pin 8 is connected to the reference voltage adjusted by potentiometer R4 that is applied to the center point where both comparators

are connected in series. This voltage is adjustable from 0 to 1.2V and the same relationship between the reference voltages on Pin 7 and Pin 8 as described for Pin 7 also exists between the reference voltage on Pin 8 and the reference voltage adjusted by potentiometer R3 that is applied to the right-most side of the second comparator (LSI-2). The reference voltage adjusted by R3 is not brought out on the connector as the required scale is easily determined during calibration by adjusting R3 so that the displayed reading agrees with the applied input signal. When the input signal is isolated from the meter's power supply it is possible to operate the meter in a bipolar mode with the center point as zero. For linear bipolar operation R4 should be adjusted to half the voltage of the required input signal span, i.e., for 1V full scale, if R5 were adjusted to 0V on Pin 7, R4 would be adjusted to 1V on Pin 8. The input signal low would then be applied to Pin 8 instead of Pin H. With +1V applied R3 would be adjusted until the displayed signal reached full scale at which time the reference voltage applied to the right-most side of the second comparator would equal 2V. In the bipolar configuration the meter is best operated in the dot mode as the dot will move from the center either right or left, depending on the signal's polarity. If the less desirable bar mode is enabled all of the segments from 1st to 10th will be lighted for zero volts and they will be sequentially turned off from right to left, depending on the amplitude of the negative input signal. For a positive signal the 10th to 20th segments will turn on sequentially left to right.

Pin 9-Auxiliary Power Ground: Pin 9 is connected internally to Power Ground Input Pin A and is provided to facilitate the connection of Half Brightness Scale Enable Pin K to power ground.

Pin 10-Auxiliary Positive Power Output: Pin 10 is connected internally to positive Power Input Pin 1 and is provided to facilitate the connection of Proportional Brightness Dot Enable Pin L to positive power.

Adjustments

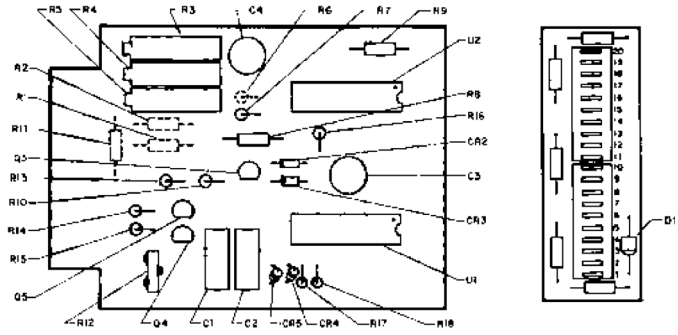

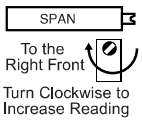

The 15 turn SPAN Pot is on the left side (as viewed from the back of the meter). Typical adjustment is 50% of the input signal range.

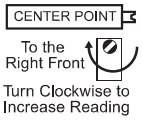

The 15 turn CENTER POINT Pot is the middle pot (as viewed from the back of the meter). Typical adjustment is 50% of the input signal range.

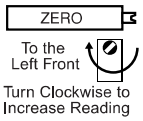

The ZERO Pot is to the right side (as viewed from the back of the meter). It enables the Digital Display Span to be offset 50% of the input signal range.

The Proportional Brightness Potentiometer superimposes a proportional brightness band to the leading edge of the bargraph which creates the optical appearance of a pointed arrow ▷. This feature produces a display of infinite resolution. The position of the signal in relation to any two adjacent segments and the scale on the faceplate can be accurately ascertained to within 1%. When the amplitude of the proportional band is adjusted counterclockwise to zero, the smooth proportional advance of the display will be replaced by a step by step movement as each bar is either turned full on or full off.

Calibration

Calibrate the meter according to the instructions shown with each application drawing for the selected operating mode. Improper calibration of R3, R4, R5 and R12 can result in a misleading display, the cause of which may be difficult to analyze. The center-zero mode, center-full scale mode, offset mode and conventional bar mode all have the same input circuit connection. The different display formats are created by the interaction of the different reference voltages adjusted by R3, R4 and R5. (Read pin descriptions for Pin J, Pin 7 and Pin 8.)

It is possible to definitely check for correct operation of the meter by selecting the bargraph mode (connect Pins D & 4 to Pin 3, power in to Pins A & 1, signal in to Pins H & J and disconnect all other pins). The following calibration steps should then be followed. Adjust R5 clockwise (at least 10 turns) to its maximum, then adjust R3 and R4 counter clockwise (at least 10 turns) to their maximums. The meter will now operate at approximately 2.4V full scale with the segments being lit sequentially from left to right, proportionate with the input signal.

Connections

PCB Edge Connector

A standard 20-pin edge connector (two rows of 10 pins on 0.156" centers) is used to connect the AM-20 meter. Order part no. CN-L10.

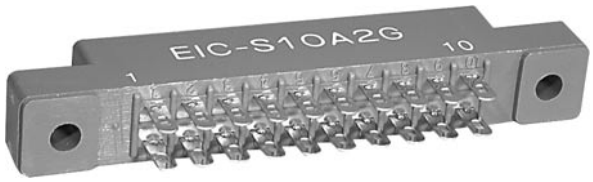

Custom Face Plates



Texmate Produces Thousands of Custom OEM Face Plates

Have Texmate Design and Build a Custom Face Plate to Suit your Next project!

• Custom face plates have a non-recurring artwork charge. A serial number is then assigned to each artwork, to facilitate re-ordering.

- Small Run or One-Off custom face plates incur an installation charge, and are generally printed on a special plastic film, which is then laminated to custom faceplate blanks as required.
- Large Run (250 pieces min): custom face plates are production silk screened, issued a part number, and held in stock for free installation as required by customer orders.
- OEMs may also order Custom Meter Labels, Box Labels Custom Data Sheets and Instruction Manuals.

The Slim Bezel Case is supplied as standard. If specified at time of ordering, any combination of Twin Mounting and Multiple Array Cases may be substituted at no additional cost. Extra cases may be ordered separately.

STANDARD SLIM BEZEL CASE

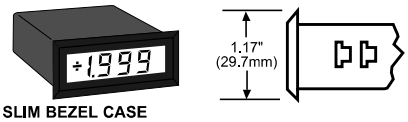

SLIM BEZEL CASE
Standard Black ABS case with matte finish bezel for single unit mounting.
Part No. **SL-CASERED** for LED's
SL-CASECLR for LCD's

OPTIONAL TWIN MOUNTING OR MULTIPLE ARRAY CASES

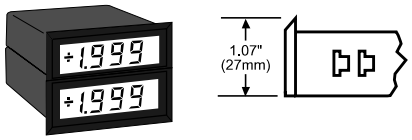

END MOUNT CASE
Same styling as Slim Bezel case but with bottom edge of bezel removed. Two End Mount cases can be twin mounted in a single cutout.
Part No. **EM-CASERED** for LED's
EM-CASECLR for LCD's

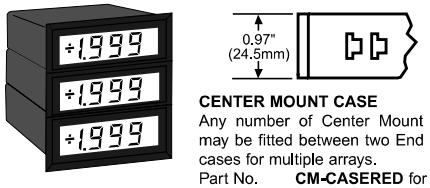

CENTER MOUNT CASE
Any number of Center Mount cases may be fitted between two End Mount cases for multiple arrays.
Part No. **CM-CASERED** for LED's
CM-CASECLR for LCD's

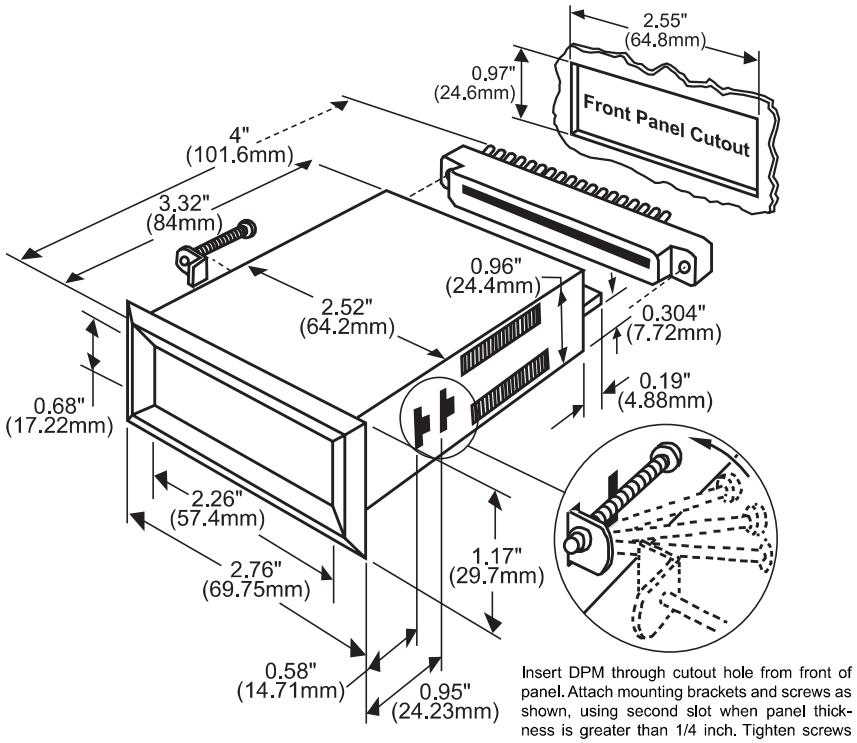

Insert DPM through cutout hole from front of panel. Attach mounting brackets and screws as shown, using second slot when panel thickness is greater than 1/4 inch. Tighten screws against rear of panel.

Standard Options for this Model Number

▸ BASIC MODEL NUMBER

AM-20 . . . . . .20 segment, 200 mV to 200 V DC, **2V** std 5 V DC Power

▸ DISPLAY

STANDARD . . Vertical Red
AM-HORZ/RED . .Horizontal Red LED option
AM-VERT/GRN . .Vertical Green LED option
AM-HORZ/GRN . .Horizontal Green LED option
AM-20DOT . . .Dot mode - one segment display. Specify left or center zero

Special Options and Accessories

▸ SPECIAL OPTIONS (Specify Inputs or Outputs & Req. Reading)

VF-0020V . . . . .20VDC Range Change
VF-0200V . . . . .200VDC Range Change
VF-1200V . . . . .1200VDC Range Change
VS-BAR20 . . . .4-20mA input signal specified required reading

▸ ACCESSORIES (Specify Serial # for Custom Artwork Installation)

CN-L10 . . . . . .Edge Connector with Solder eyelet, 10 Pin Dual
TB-KIT . . . . . .Replacement Terminal Block Connector Kit (3)
SL.CASECLR . .Slim Bezel Case LCD Std case w/mtg hardware
CM.CASECLR . .Slim Bezel Center Case LCD w/mtg hardware
EM.CASECLR . .Slim Bezel End Case LCD w/mtg hardware

Texmate warrants that its products are free from defects in material and workmanship under normal use and service for a period of one year from date of shipment. Texmate's obligations under this warranty are limited to replacement or repair, at its option, at its factory, of any of the products which shall, within the applicable period after shipment, be returned to Texmate's facility, transportation charges pre-paid, and which are, after examination, disclosed to the satisfaction of Texmate to be thus defective. The warranty shall not apply to any equipment which shall have been repaired or altered, except by Texmate, or which shall have been subjected to misuse, negligence, or accident. In no case shall Texmate's liability exceed the original purchase price. The aforementioned provisions do not extend the original warranty period of any product which has been either repaired or replaced by Texmate.

We are pleased to offer suggestions on the use of our various products either by way of printed matter or through direct contact with our sales/application engineering staff. However, since we have no control over the use of our products once they are shipped, NO WARRANTY WHETHER OF MERCHANTABILITY, FITNESS FOR PURPOSE, OR OTHERWISE is made beyond the repair, replacement, or refund of purchase price at the sole discretion of Texmate. Users shall determine the suitability of the product for the intended application before using, and the users assume all risk and liability whatsoever in connection therewith, regardless of any of our suggestions or statements as to application or construction. In no event shall Texmate's liability, in law or otherwise, be in excess of the purchase price of the product.

Texmate cannot assume responsibility for any circuitry described. No circuit patent or software licenses are implied. Texmate reserves the right to change circuitry, operating software, specifications, and prices without notice at any time.

TEXMATE INC
995 Park Center Drive • Vista, CA 92081-8397
Tel: 1-760-598-9899 • USA 1-800-839-6283 • That's 1-800-TEXMATE
Fax: 1-760-598-9828 • Email: sales@texmate.com • Web: www.texmate.com
Texmate has facilities in Japan, New Zealand, Taiwan, and Thailand. We also have authorized distributors throughout the USA and in 28 other countries.

For product details visit www.texmate.com
Local Distributor Address

Copyright © 2004 Texmate Inc. All Rights Reserved.